Electronic

RegNo - 2023/CS/184
Name - J.P.C.P.Senawirathna
Index - 23001844

Activity 01

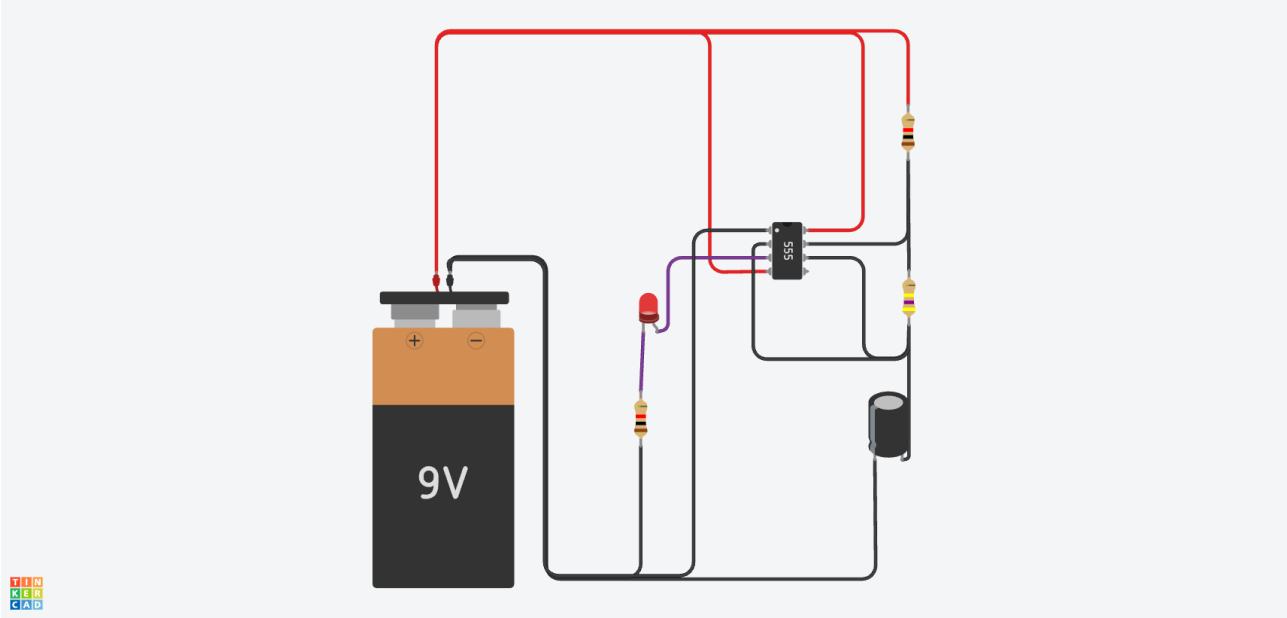

https://www.tinkercad.com/things/fYFOVTe8dNA-activity-01-experiment-8/editel?returnTo=https%3A%2F%2Fwww.tinkercad.com%2Fdashboard%2Fdesigns%2Fall&sharecode=Bb_FaP__eHYyA-xYuynKgenEpjK7Oa5l3NSAnaJajwc

Activity 02

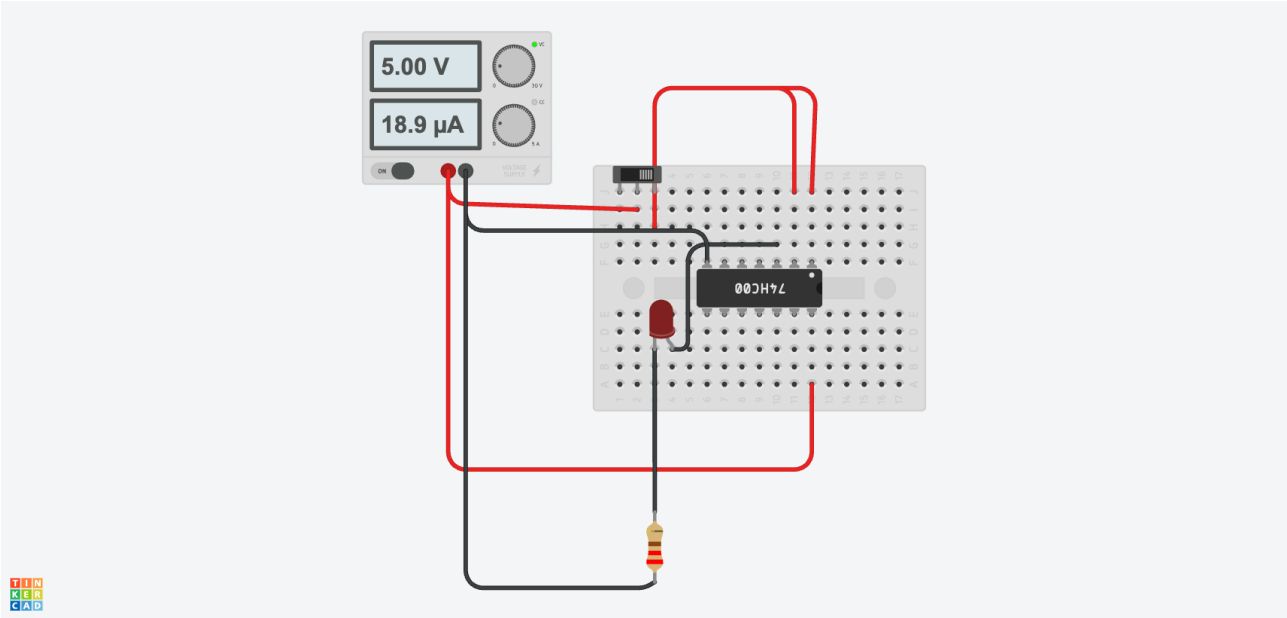

https://www.tinkercad.com/things/bwIO61GFdyd-activity-02-experiment-08/editel?returnTo=https%3A%2F%2Fwww.tinkercad.com%2Fdashboard%2Fdesigns%2Fall&sharecode=eXP61NCNZ3hVCaHW3-LSCgIXy9z_j7AtKmUMe2BSv_M

(1) because protection for the LED
(2) because average voltage of led is 2A. But output voltage is 5A , so we need voltage divider .
And Most suitable resistor is V = IR
3 = 0.0113 (R)
R = 265Ω
(3) Switch
(4) 7400IC
(5) Across the **center gap** of the breadboard.
So each pin is on a different row and not shorted.
(6) The IC datasheet
(7) VCC -> 5v
GND -> Ground
input -> Switch
Output -> LED + 330Ω resistors
(8)

Input	Output
0	1
1	0

Activity 03

AND GATE

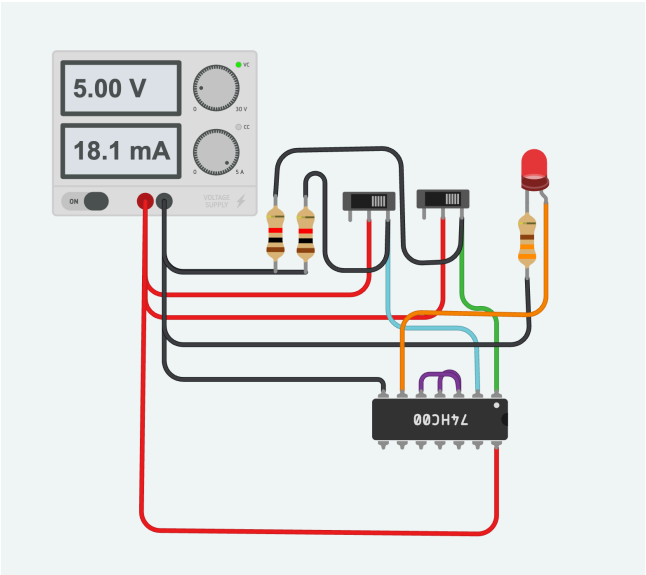

OR GATE

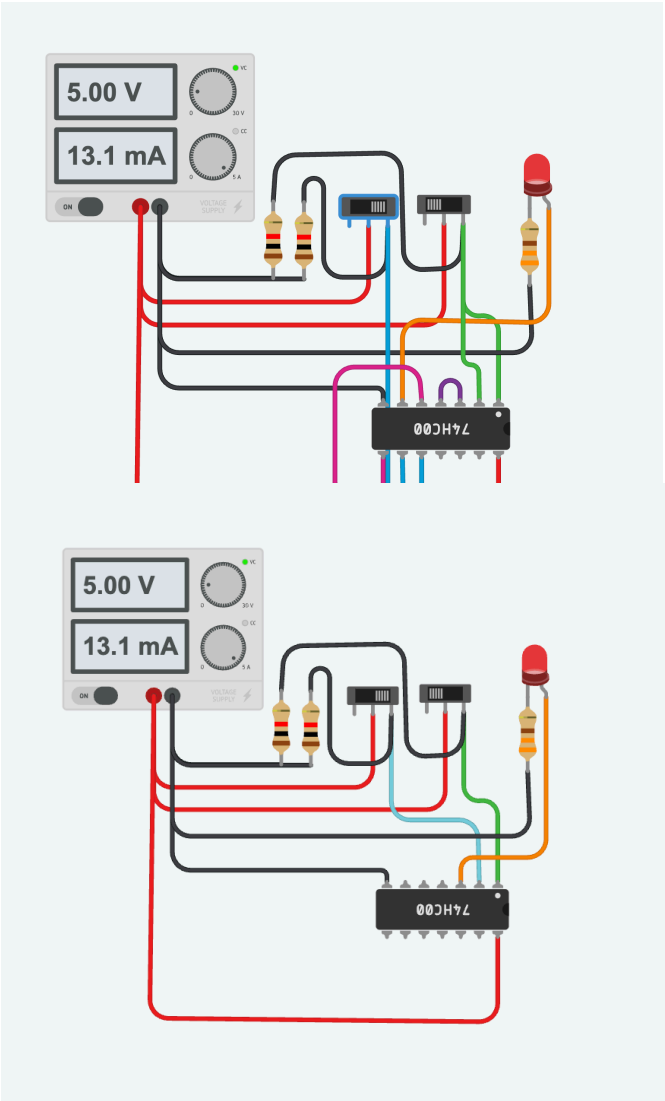

NAND GATE

NOR GATE

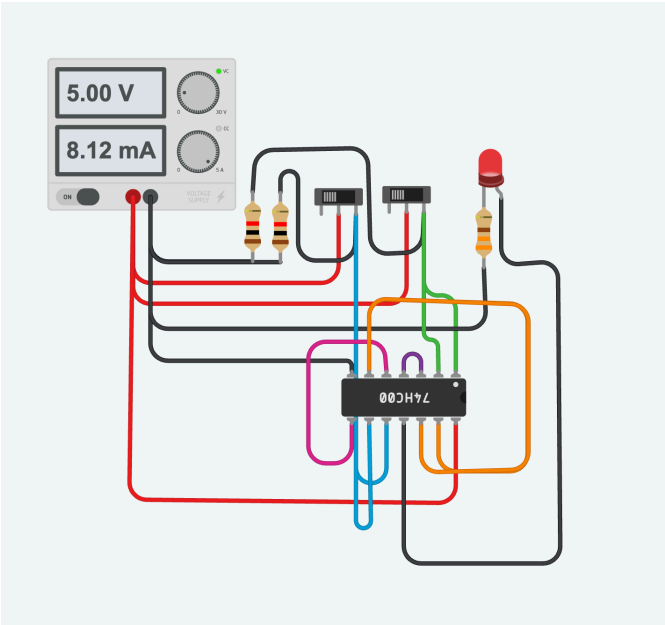

XOR GATE

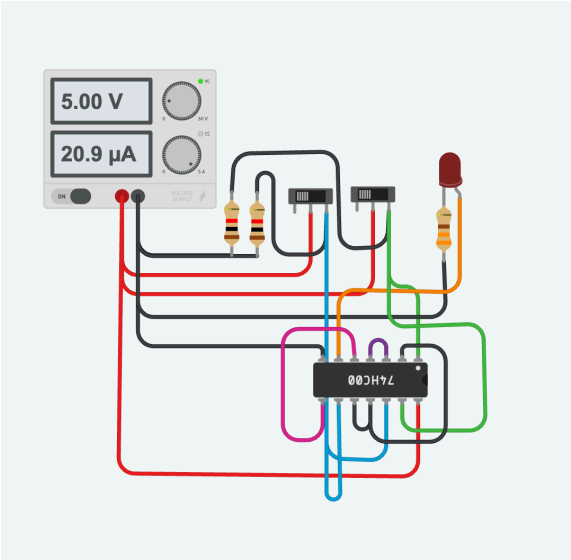

https://www.tinkercad.com/things/deuev8QjCrl-activity-03-experiment-08/editel?returnTo=https%3A%2F%2Fwww.tinkercad.com%2Fdashboard%2Fdesigns%2Fall&sharecode=UhLEZBj8Ci2xqA8v20I4QwT_93YU747AFqrTDe1P9a0

(1) 7400IC

(3)

A	B	Output
0	0	0
5	0	0
0	5	0
5	5	4.64

ACTIVITY 04

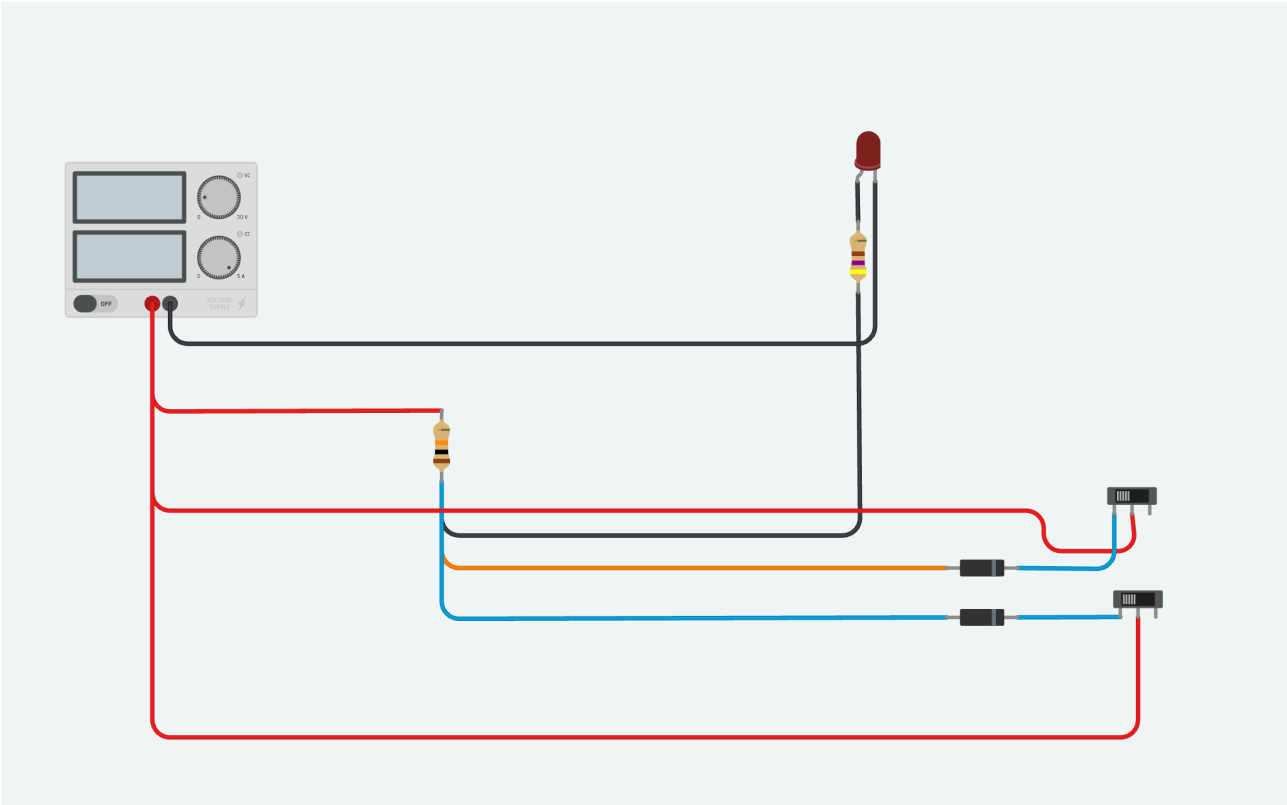

https://www.tinkercad.com/things/acydXudINeB-actitivity-04-experiment-08/editel?returnTo=https%3A%2F%2Fwww.tinkercad.com%2Fdashboard%2Fdesigns%2Fall&sharecode=1d_jiATrYFLiAo2LaI7462t_pHTmC735m1L3Q-FXnbQ

ACTIVITY 05

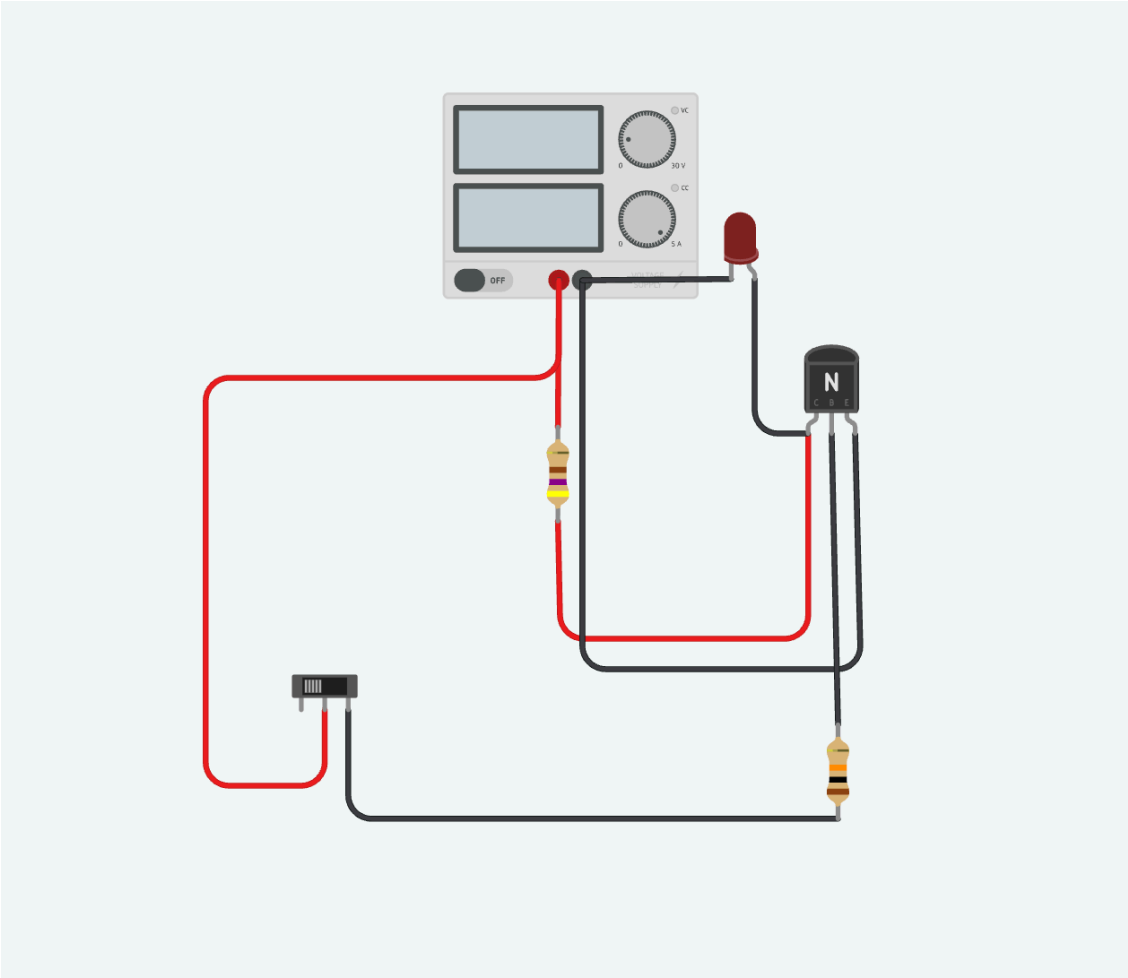

https://www.tinkercad.com/things/clvHQjYFl1y-activity-05-experiment-08/editel?returnTo=https%3A%2F%2Fwww.tinkercad.com%2Fdashboard%2Fdesigns%2Fall&sharecode=IBrRopgGywgtJOvSTkltzA8Y9v5C869I6lmSf4Ykc2Y

Input	S	Output
0v	0	1.94V
5v	1	41mV

ACTIVITY 06

0.0	5.0
0.5	5.0
1.0	5.0
1.5	5.0
2.0	0.2
2.5	0.2
3.0	0.2
3.5	0.2
4.0	0.2
4.5	0.2
5.0	0.2

ACTIVITY 07

A	B	Output (V)
0	0	0.2V
0	1	0.2V
1	0	0.2V
1	1	5.0V

ACTIVITY 08

A	B	Output (V)
0	0	5.0V
0	1	5.0V
1	0	5.0V
1	1	0.2V

****